MANUFACTURING METROLOGY TEAM

The University of Nottingham
UNITED KINGDOM · CHINA · MALAYSIA

INFORMATION-RICH APPROACH TO NON-DESTRUCTIVE NON-CONTACT MEASUREMENT PLANNING, INSPECTION AND VERIFICATION FOR ADDITIVE MANUFACTURING

By Patrick Bointon, Petros Stavroulakis, Nicholas Southon, Richard Leach

Introduction

The recent proliferation of non-contact optical 3D instruments in the manufacturing industry is the most reliable indicator for the constant need to inspect the form of products quickly and efficiently, with the necessary detail to allow for quality control. This need stems for industry's need to optimise production-line control and evaluate final product quality and functionality. However, contrary to their influx, there is currently a distinct gap between what is physically possible and what is commercially available, and so the metrology systems targeted specifically for AM parts could benefit from an intermediate genre of form measurement products and strategies which are flexible enough to be adaptable to a wide range of products but still possess the high specifications and accuracy of custom solutions.

The Manufacturing Metrology Team (MMT) at the University of Nottingham is working to address these issues to make form measurement faster, more accurate and more efficient for use in AM. This will be accomplished using "information-rich metrology" (IRM), which is the concept of using accurate and rigorous modelling of the interaction with the object being measured (i.e. the interaction of light with the surface in the case of structured light systems) used in combination with the *a priori* information that is available. The IRM concept and ideas for potential advantageous applications have been illustrated in figures 1 and 2.

Figure 1. Concept of information rich metrology.

IRM has a lot to offer in terms of assisting metrology systems to achieve their full potential in an efficient and timely manner. IRM is especially useful for AM applications where *a priori* data for the measured object is readily available. When object data is combined with a model of the measurement instrument, simulations of the measurement process can be used to overcome problems more deterministically than would be possible in an open-loop measurement scenario that ignores the *a priori* data.

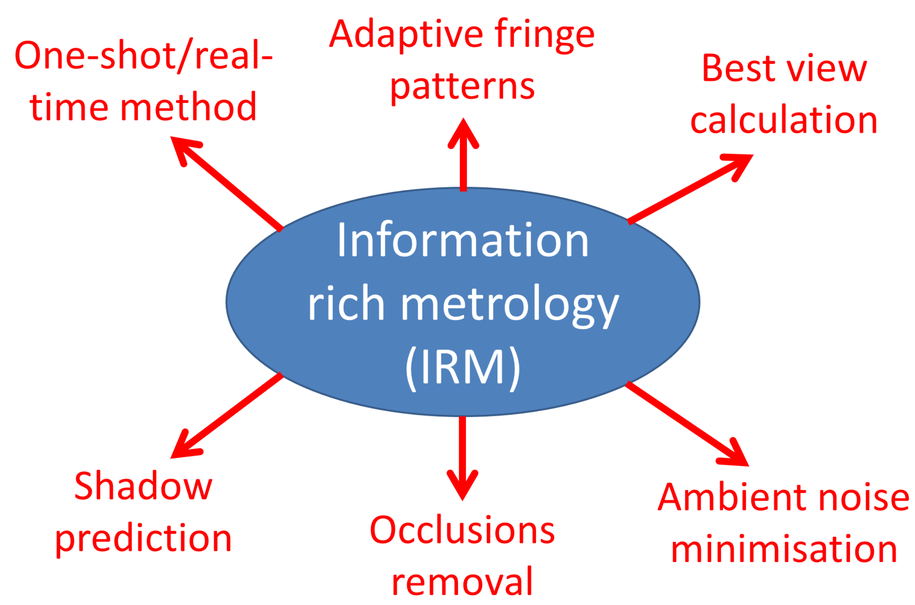

Figure 2. Applications of IRM.

Manufacturing Metrology Team Projects

Post-process measurements

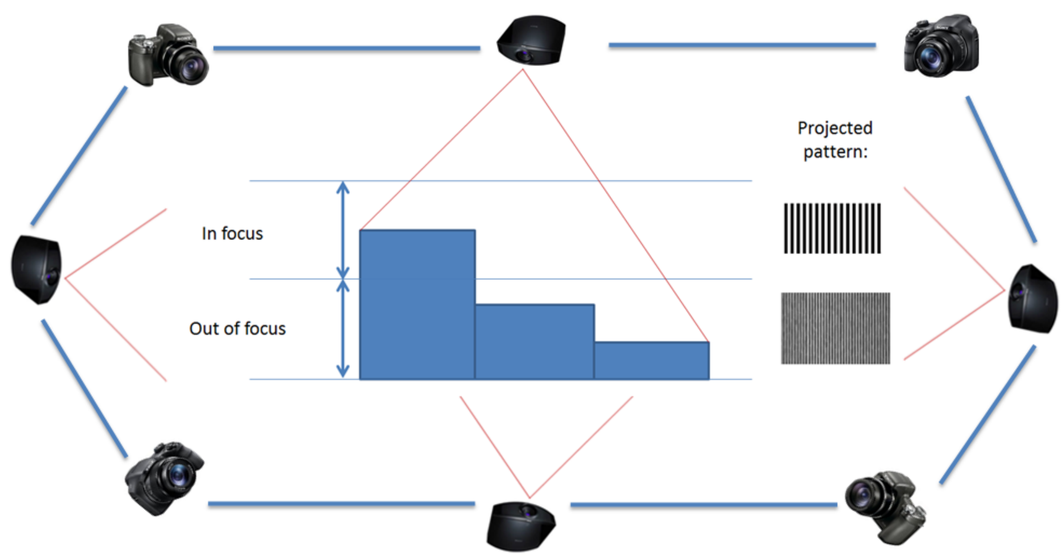

Figure 3. One-Shot multiple camera coded structured light system.

The aim of the project is to design and produce a 'one-shot' optical based system, which is able to accurately measure and reconstruct the complete outside form of AM components. The system is aimed at AM applications, and will attempt to maximise the available accuracy and resolution. The system will use a multiple-view paradigm, in conjunction with *a priori* information in order to optimise the measurement result in the minimum amount of time. The flowchart of the system's procedure is shown in Figure 4.

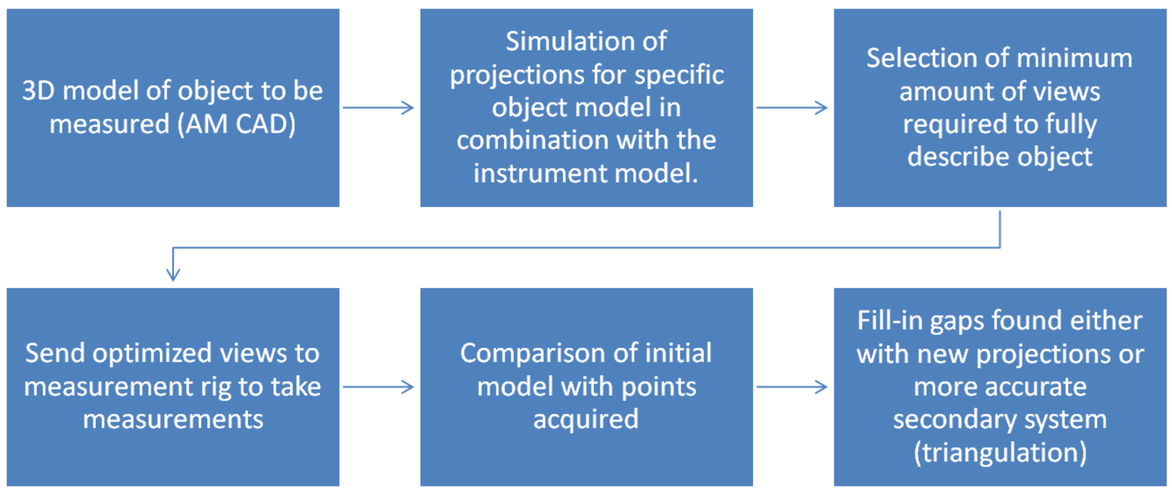

Figure 4. Flowchart of the processing and measuring steps that would be carried out for each AM part.

In-line process monitoring

The aim of the project is to incorporate 3D surface measurements into a multi-sensor in-process monitoring system for the polymer laser sintering process. IRM principles will be used to make data capture and analysis more efficient by using information such as the source digital files. Simulations will be used to optimise positioning of the sensors and to investigate the effects of defects present in the process.

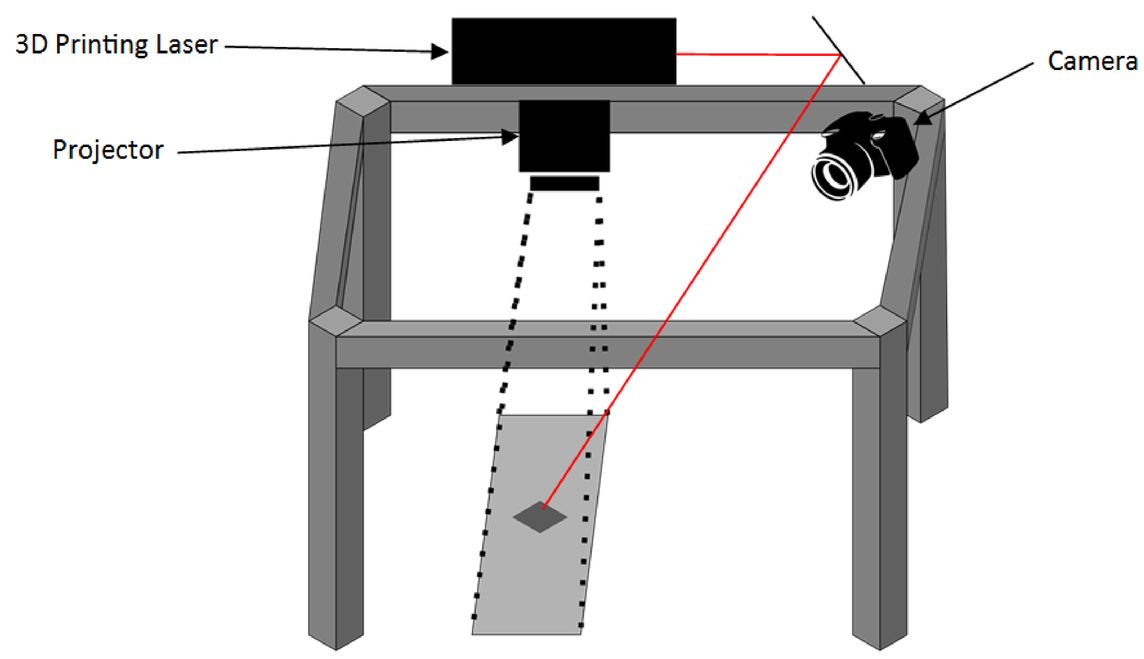

Figure 5. In-line optical process monitoring system.

Summary

The MMT is working on providing accurate and robust non-contact optical measuring systems for both in-line process monitoring, and post-process, one-shot complete 3D form reconstruction measurements. A framework for the optical form measurement systems for AM applications that is based on the availability of CAD data and optical models of the measurement system has been presented. Our efforts are currently focused on attempting to realise the IRM concepts presented here in a manner which would be accurate but also practical enough to realise in an industrial AM measurement scenario.

Acknowledgements

The authors would like to acknowledge the support provided by the Engineering and Physical Sciences Research Council grants (EP/M008983/1, EP/L01534X/1 and EP/L016567/1) , 3T RPD and BMW.

References

Stavroulakis P. I., Leach R. K., Review of Post-process Optical Form Metrology for Industrial-grade Metal Additive Manufactured Parts. Rev. Sci. Instrum. 2016; 87:041101.

Stavroulakis P. I., Southon N., Bointon P., Leach R. K. Assisted 3D Form Reconstruction in Structured Light Systems by Pre-calculation of Shadows Through the Use of Ray-tracing Simulations. 2016 to be published.